IMMEDIATE ACTION

AFM 2-50
FM 100-27

AIR FORCE MANUAL
ARMY FIELD MANUAL

AEROSPACE OPERATIONAL DOCTRINE

U.S. ARMY/U.S. AIR FORCE DOCTRINE FOR TACTICAL AIRLIFT OPERATIONS

1 JANUARY 1967

DEPARTMENT OF THE AIR FORCE
DEPARTMENT OF THE ARMY

S/S
Jan 31, 1982

IMMEDIATE ACTION

AFM 2-50
FM 100-27

AIR FORCE MANUAL
NO. 2-50
ARMY MANUAL
NO. 100-27

DEPARTMENTS OF THE AIR FORCE AND THE ARMY
Washington, *1 January 1967*

Aerospace Operational Doctrine

U.S. ARMY/U.S. AIR FORCE DOCTRINE FOR TACTICAL AIRLIFT OPERATIONS

This manual sets forth concepts, doctrine, organizations, and procedures to be employed by U.S. Army and U.S. Air Force component forces within unified/joint force commands for the effective conduct of combat service support and tactical airlift operations. The manual provides the basis upon which to organize and employ combat service support and tactical airlift forces within a theater of operations.

Contents

DISTRIBUTION: See page 4-14.

Chapter 1

INTRODUCTION

101. General:

a. This publication establishes joint doctrine, responsibilities, and procedures employed by Army and Air Force component forces for use in planning coordinating and executing tactical airlift operations in joint air-ground operations. This manual provides for the interface between USAF air-transportation and Army transportation to the final destination so that the tactical airlift system and the Army logistics system are geared to each other from the logistics base to the consumer. Guidance pertaining to airlift operations peculiar to joint aeromedical evacuation is contained in FM 31-8/NAVMED P-5047/AFM 160-27, Medical Service in Joint Oversea Operations. Other publications pertaining to joint tactical airlift operations are listed in appendix I, References.

102. Applicability. The manual is written to have world-wide applicability under varying levels of conflict and geographical environments. The terms used are those defined in JCS Pub 1, The Dictionary of United States Military Terms for Joint Usage, and in appendix II, Glossary of Terms.

103. Making Recommendations. Users are encouraged to submit comments or recommended changes to this manual. Comments or recommended changes from Army sources, with reasons therefor, should be submitted on DA Form 1598 and forwarded directly to Commanding General, U.S. Army Combat Developments Command, Institute of Combined Arms and Support, Fort Leavenworth, Kans 66027. Comments or recommended changes from Air Force sources, with reasons therefor, should be forwarded directly to Headquarters, U. S. Air Force Tactical Air Command, Langley Air Force Base, Va. 23365.

APPENDIX I

REFERENCES

Joint

JCS Pub 1	Dictionary of United States Military Terms for Joint Usage
JCS Pub 2	Unified Action Armed Forces
JCS Pub 3	Joint Logistics and Personnel Policy and Guidance
JCS Pub 8	Unified Doctrine for Air Defense from Oversea Land Areas
FM 57-1/ AFM 2-51	U.S. Army/U.S. Air Force Doctrine for Airborne Operations
FM 100-25/ AFM 2-52	Tactical Air Support of Land Forces
AR 525-25/ AFR 55-9	Delineation of Service Responsibilities for Tactical Air Control Parties (TACP's)

Army

AR 10-18	Military Traffic Management and Terminal Service
AR 40-535	Aeromedical Evacuation
AR 55-10	Military Standard Transportation and Movement Procedure (MILSTAMP), with Changes 1 and 2
AR 55-11	Agreements Between Army and Air Force
AR 55-16	Movement of Cargo by Air and Surface; Including Less Than Release Unit and Parcel Post Shipments
AR 59-106	Air Transportation
AR 320-5	Dictionary of United States Army Terms (Short Title AD)
AR 320-50	Authorized Abbreviations and Brevity Codes
AR 700-5	Organization and Operation of Inventory Control Points
AR 700-44	Supply of Common Items to Army and Air Force in Overseas Commands
FM 1-5	Army Aviation Organization and Employment, with Changes 1-6
FM 1-100	Army Aviation, with Change 1
FM 6-20-1	Field Artillery Tactics
FM 6-20-2	Field Artillery Techniques, with Change 1
FM 8-10	Medical Service, Theater of Operations, with Changes 1-2
FM 8-35	Transportation of the Sick and Wounded, with Changes 1-3
FM 10-8	Air Delivery of Supplies and Equipment in the Field Army
FM 10-20	Organization for Supply of Petroleum Products in Theaters of Operations
FM 10-50	Supply and Transport Battalion, Division Support Command
FM 10-64	Quartermaster Class II and IV Supply in Theaters of Operations
FM 11-20	Signal Operations, Theater of Operations, with Change 1
FM 11-21	Tactical Signal Communication Systems, Army, Corps and Division
FM 11-50	Signal Battalion, Armored Infantry, and Infantry (Mechanized) Divisions
FM 11-57	Signal Battalion. Airborne Division, with Change 1
FM 11-86	Combat Area Signal Battalion, Army, with Change 1
FM 11-92	Corps Signal Battalion

FM 11-95	Army Signal Battalion, with Change 1
FM 11-137	Signal Communications Center Operation Company
FM 21-30	Military Symbols
FM 24-1	Tactical Communications Doctrine
FM 24-17	Tactical Communications Center Operations, with Change 1
FM 31-8	Medical Service in Joint Oversea Operations
FM 31-16	Counterguerrilla Operations
FM 38-1	Logistics Supply Management
FM 38-6	Logistics Management Controls
FM 38-9	Transportation and Traffic Management, with Changes 1-3
FM 54-1	The Logistical Command, with Changes 1-2
FM 54-2	The Division Support Command
FM 54-3	The Field Army Support Command
FM 54-1	The Support Brigade
FM 55-4	Transportation Movements in Theaters of Operations, with Changes 1-2
FM 55-6	Transportation Services in Theaters of Operations
FM 55-9	Transportation Services and the Transportation Brigade in the Field Army
FM 55-10	Transportation Movements Services Field Army
FM 55-46	Army Aviation Transport Services and Units in the Field Army
FM 57-10	Army Forces in Joint Airborne Operations
FM 57-35	Airmobile Operations
FM 57-38	Pathfinder Operations
FM 57-100	The Airborne Division
FM 61-100	The Division
FM(S) 100-1	Doctrinal Guidance (U), with Changes 1-16, 18-31
FM 100-5	Field Service Regulations—Operations, with Change 1
FM 100-10	Field Service Regulations, Administration, with Change 1
FM 100-15	Field Service Regulations, Larger Units
FM(C) 100-20	Field Service Regulations—Counterinsurgency (U)
FM 100-26	Army Air-Ground System
FM 101-5	Staff Officers' Field Manual: Staff Organization and Procedure, with Change 1

Air Force

AFM 1-1	USAF Basic Doctrine
AFM 2-1	Tactical Air Operations—Counterair, Interdiction and Close Air Support
AFM 2-2	Tactical Air Operations in Conjunction with Amphibious Operations
AFM 2-4	Tactical Air Operations—Tactical Airlift
AFM 2-5	Tactical Air Operations—Special Air Warfare
AFM 2-6	Tactical Air Operations—Tactical Air Reconnaissance
AFM 2-7	Tactical Air Operations—Tactical Air Control System (TACS)
AFM 2-21	Aerospace Operational Doctrine—Strategic Airlift
AFM 3-21	United States Air Force Strategic Airlift
AFM 51-4	Combat Control Team Training and Procedures
AFM 71-4	Packing and Handling of Dangerous Materials for Transportation by Military Aircraft

APPENDIX II

GLOSSARY OF TERMS

Air Force Component Command Post (AFC CP)—The AFCCP is the Air Force component field headquarters tactical facility and is comprised of the command section and various staff agencies. The AFCCP plans, directs, coordinates, and supervises the full range of Air Force operations and support. Within the AFCCP, the Deputy for Operations is charged with staff responsibility for planning, coordinating, and supervising activities pertaining directly to performance of the command mission. It is through the Director of Combat Operations that the Deputy for Operations exercises staff supervision of the Tactical Air Control Center(s) which is (are) the air operations center(s) for the AFCCP. Air Force representation is provided at the Army Component Command Post to facilitate the required coordination for joint Army-Air Force operations.

Air Support Radar Team (ASRT)—The ASRT is a mobile unit equipped with precision radar to provide all-weather guidance for tactical aircraft.

Air Traffic Regulation Center (ATRC)—The ATRC is a component element of the TACS. The ATRC is normally the primary agency through which air traffic is regulated within the combat area. It is normally incorporated as an integral part of the CRC utilizing the CRC radar to fulfill its functions.

Airlift Control Element (ALCE)—ALCEs are established at airfields and landing zones to provide aircraft movement control, communications, supervision of loading and offloading teams, coordination of aeromedical evacuation and for continuous liaison with all interested agencies.

Allocation (Airlift)—The allotment by the Air Force Component Commander of apportioned tactical airlift capability expressed in sorties by type aircraft, gross tonnage, or a combination of the two.

Apportionment (Airlift)—Total tactical airlift capability divided, by a Unified/Joint Force Commander, among the airlift tasks to be performed.

Combat Control Team (CCT)—A CCT is composed of Air Force personnel who are organized, trained and equipped to locate, identify and mark drop/landing/extraction zones. In addition, CCTs provide limited weather observations as required, install and operate navigational aids and communications, and control air traffic in the airhead area.

Control and Reporting Center (CRC)—The CRC is subordinate to the TACC and provides radar control and surveillance within its assigned area of responsibility. It has the capability to collect, display, evaluate, and disseminate information on aerial activity. The primary control radars of the TACS are located at the CRC. The CRC coordinates radar surveillance and control activities of the TACS and furnishes air situation information to the TACC and information to the DASC(s) as required.

Control and Reporting Post (CRP)—The CRP is subordinate to the CRC and provides radar control and surveillance within an assigned area of responsibility. CRPs have the capability of assuming Control and Reporting Center functions in an emergency.

Emergency Tactical Airlift Request.—A request for tactical airlift support which requires immediate action and takes precedence over all other priorities.

Forward Air Control Post (FACP)—The FACP is a lightweight, highly mobile radar surveillance and control facility. It conducts radar surveillance and tactical control within the forward combat area as designated by the CRC.

Fragmentary (FRAG) Order—An abbreviated form of an operations order, usually issued on a day-to-day basis, which eliminates the need for restating information contained in a basic operations order. It may be issued in sections.

Immediate Airlift Missions—Airlift missions to meet specific requests which arise during the course of operations and which by their nature cannot be planned in advance. Immediate airlift missions are performed in response to emergency tactical airlift requests.

Liaison—That contact or intercommunication maintained between elements of military forces to insure mutual understanding and unity of purpose and action. It is often aided by exchange of personnel.

Routine Tactical Airlift Request—A request for tactical airlift support which can be satisfied in accordance with a program, planned in advance of operations.

Preplanned Airlift Missions—Airlift missions in accordance with a program, planned in advance of operations. Preplanned missions are performed in response to routine tactical airlift requests.

Supply Management, Real-Time—Management of U.S. Army supplies using automatic data processing (ADP) equipment which provides instantaneous transmission of data.

Tactical Air Control System (TACS)—The TACS provides the Air Force component commander with the organization and equipment necessary to plan, direct and control tactical air operations and to coordinate air operations with other Service components. It is made up of the control agencies and the linking communications system which provide the means for centralized direction while still permitting decentralized execution of specific tasks and operations. The system with its varied equipment is designed to provide maximum flexibility so that it may be tailored to any given tactical situation.

TASTA-70—An approved U.S. Army concept for providing combat service support to the Army in the theater of operation during the period 1966 through the mid-1970s.

Terminals—Those military and commercial facilities used for the loading, unloading and intransit handling of cargo or personnel by various modes of transportation.

Chapter 2

GENERAL CONCEPTS

201. Objective. Each commander is concerned with the immediately responsive availability and control of the means that provide mobility for his forces. Ready availability of adequate transportation exerts a vital influence on the commander's capability for decisive response to enemy actions or unstable political situations, and on plans for gaining and holding the initiative. The element of time and the requirement for employing technological advances in weapons and mobility add overwhelming emphasis to the need for reliance on air for the movement and supply of military forces. The characteristics of air movement make it the most suitable means for meeting mobility requirements in terms of time, distance, and accessibility. Air movement may be the primary or sole mode of transportation support for the timely deployment to, and employment in, critical areas. It provides flexible and responsive support to elements of the military force.

The ultimate objective of joint tactical operations is to move troops and materiel from the in-theater sources to the most forward destinations in the combat zone with a minimum number of transshipments.

202. Mission:

a. Tactical airlift is the means by which personnel, supplies and equipment are delivered by air on a sustained, selective or emergency basis to dispersed sites at any level of conflict throughout a wide spectrum of climate, terrain and conditions of combat. Air Force tactical airlift forces increase the battlefield mobility of the Army in land combat operations by providing a capability to airland or airdrop combat elements and providing these forces with sustained logistical support. Air logistic support permits rapid delivery with a minimum of transshipments from source to final user destination. When required in furtherance of the combat mission of the Army, the Air Force will sustain an air line of communications (ALOC) to divisions and brigades and will deliver to lower echelons when necessary.

b. Helicopters and follow-on rotary wing aircraft assigned to Army units for intratheater movement, supply and resupply functions will be utilized to provide airlift support of Army forces in accordance with operational requirements.

c. The tactical airlift capability of Army rotary wing aircraft and Air Force fixed wing aircraft will be utilized to take maximum advantage of the inherent capabilities of each type aircraft. Air Force fixed wing aircraft and Army helicopters will be employed in a mutually complementary role to accomplish tactical airlift requirements in a theater of operations. Accordingly, an operational interface of the airlift forces of both Services will insure optimum effectiveness. This dual capability enhances the utility and military significance of both forces by providing greater tactical air mobility for military forces.

203. Priorities and Apportionment:

a. Air Force tactical airlift capability is used to support all Services. The responsiveness of tactical airlift increases the combat effectiveness of each Service, with assured availability of airlift being essential to the attainment of maximum battlefield mobility and support of combat forces. Accordingly, the establishment of priorities, and the apportionment of airlift sorties against needs, are responsibilities of the joint force commander. His air and land component commanders will submit recommended actions in

this matter. Only the joint commander can change the daily apportionment of air effort.

b. Directives of the joint force commander are translated into priority of tasks for execution by tactical airlift forces. On the basis of these tasks, the available airlift capability is apportioned in the Service components. Each component command determines priorities for the accomplishment of its own airlift needs. The Air Force component commander will then advise the land component commander of the number of tactical airlift sorties which will be committed daily in response to the apportionment made by the joint force commander. The land component commander then specifies how the sorties provided him will be distributed to subordinate units and so informs the Air Force component commander.

c. Service components submit preplanned airlift requirements to the joint force commander on a recurring basis and the Air Force component commander provides the available airlift capability. The needs and capability must then be balanced. If preplanned requirements exceed tactical airlift capability, a decision concerning apportionment must be made by the joint force commander. In the event unforeseen requirements of an emergency nature exceed a Service component's apportioned airlift, provisions are made by the joint force commander to insure that rapid adjustments may be effected to satisfy requirements.

204. Basing Considerations. The location of air base facilities for tactical operations must be consistent with the requirements of the task to be accomplished, the size of the forces employed, and the time limitations allowed for accomplishing the mission. Some basic considerations for the selection, development, and maximum exploitations of sites for tactical airlift ground environment facilities are:

a. Proximity to agencies generating airlift requirements.

b. Terrain characteristics, and meteorological conditions.

c. Access and linkup facilities between supply points, ports, units, and existing facilities.

d. Actual and potential facilities, capabilities, and limitations, including housing, communications, and water supply.

e. Speed, range, operational characteristics and payload capacity of tactical airlift aircraft assigned.

f. Security from hostile attack.

205. Operation Necessity:

a. The Army in the field depends, to an increasing degree, upon responsive tactical airlift to move troops and material to and within the combat zone. This tactical airlift, in conjunction with Army organic ground and air vehicles, provides the mobility necessary for rapidly executed and far ranging land combat operations. This degree of mobility necessitates that command and control methods be such that reaction time in response to mission requirements satisfies the needs of the combat and logistical situation. The system employed to direct and control tactical airlift operations must be simple and streamlined to eliminate elements and agencies not essential to data flow, decision making, and mission execution.

b. The tactical airlift mission is closely associated with the needs of each Army commander in the field. The need to adapt to shifting battlefield conditions, and other limitations, often results in non-scheduled operations, many sorties of short duration, and low aircraft utilization rate; however, the available tactical airlift force must be employed with prudent attention to efficiency of operation.

c. Army field forces may have requirements for airlift airframes to be immediately available with limited regard to use of the aircraft's full payload capability. Such requirements are determined by the developing situation in a theater of operations.

206. Administrative and Logistical Support. The Air Force will be responsible for ad-

ministration and logistical support of tactical airlift (i.e., CV–2, CV–7, C–123 aircraft and/or units) when attached to the Army in the field, except as otherwise specified in the attachment order or jointly agreed to by the Army and Air Force component commanders.

207. Operation of Air Terminals. Functional responsibilities and procedures for operation of air terminals and staging areas, to include prepackaging, packaging for through shipment or transshipment and packaging for auxiliary modes of delivery will be in accordance with AFR 76–7/AR 59–106/OPNAV Instruction 4660.1/MARCOR JSAR 2–56–3000, Air Transportation.

208. Functional Responsibilities:

a. The Air Force will own and operate all fixed wing aircraft designed for tactical airlift. (This does not apply to administrative mission support Army fixed wing aircraft.)

b. The Army will own and operate helicopters and follow-on rotary wing aircraft which are designed and operated for intratheater movement, fire support, supply and resupply of Army forces and those Air Force control elements assigned to the DASC (Direct Air Support Center) and subordinate thereto. (This does not apply to rotary wing aircraft employed by Air Force SAW (Special Air Warfare) and SAR (Search and Rescue) forces and rotary wing administrative mission support aircraft. The Army and Air Force jointly will continue to develop VTOL aircraft. Dependent upon evolution of this type aircraft, methods of employment and control will be matters for continuing joint consideration by the Army and Air Force.)

Chapter 3

ORGANIZATION

301. Unified Command:

a. A well-defined functional command and staff structure is essential to a coordinated effort on the part of the forces involved. This principle is especially applicable to the employment of a unified/joint force. Unified Action Armed Forces, JCS Pub 2, sets forth the principles, doctrines, and functions governing the activities and performance of the Armed Forces of the United States when two or more Services or elements are acting together, and prescribes command authority, responsibilities and functions which apply under these circumstances. As used in this manual, the term "joint force" refers to any joint force including a unified command, a subordinate unified command, or joint task force(s). This chapter reviews the authority and organization prescribed for the establishment and employment of a joint force including the mission and organization of Army and Air Force Service components.

b. A unified command is a command with a broad continuing mission, under a single commander and composed of significant assigned components of two or more Services. The authority which establishes a unified command shall determine the force structure, designate a commander, assign or have assigned to him forces and his mission, and define his general geographic area of responsibility. Refer to figure 1 for a typical unified command structure.

c. The commander of a unified command establishes priorities and assigns to component commanders tasks which will best accomplish the overall mission. His responsibilities include the apportionment of the tactical air effort for support of Army forces. The commander of a unified command may organize subordinate joint task forces as required to accomplish specific objectives. He is responsible for the resolution of matters involving more than one Service component.

d. The commander of a unified command shall have a joint staff with appropriate members in key positions of responsibility from each Service having component forces under his command. The joint staff is reasonably balanced with regard to the composition of forces and the character of the operations. Normally, a member of the joint staff shall not also function as the commander of one of the Service components or of a subordinate force.

e. When so authorized by the Joint Chiefs of Staff, the commander of an existing unified commands. A commander of a subordinate unified command, within his area of responsibility and subject to modification by the authority appointing him to such command, has functions, authority and responsibilities similar to those of the commander of a unified command established by the President. However, commanders of Service components of subordinate unified commands will communicate directly with the commanders of the Service components of the unified command on matters which are the responsibility of the Military Departments and Services or as directed by their Chief of Service.

f. Within the joint force concept, the Service component commanders are assigned complementary missions for attaining overall objectives. Each Service component commander is responsible for making recommendations to the joint force commander regarding the employment of his component. Each Service component commander exer-

TYPICAL UNIFIED COMMAND STRUCTURE
AND CHAINS OF COMMAND

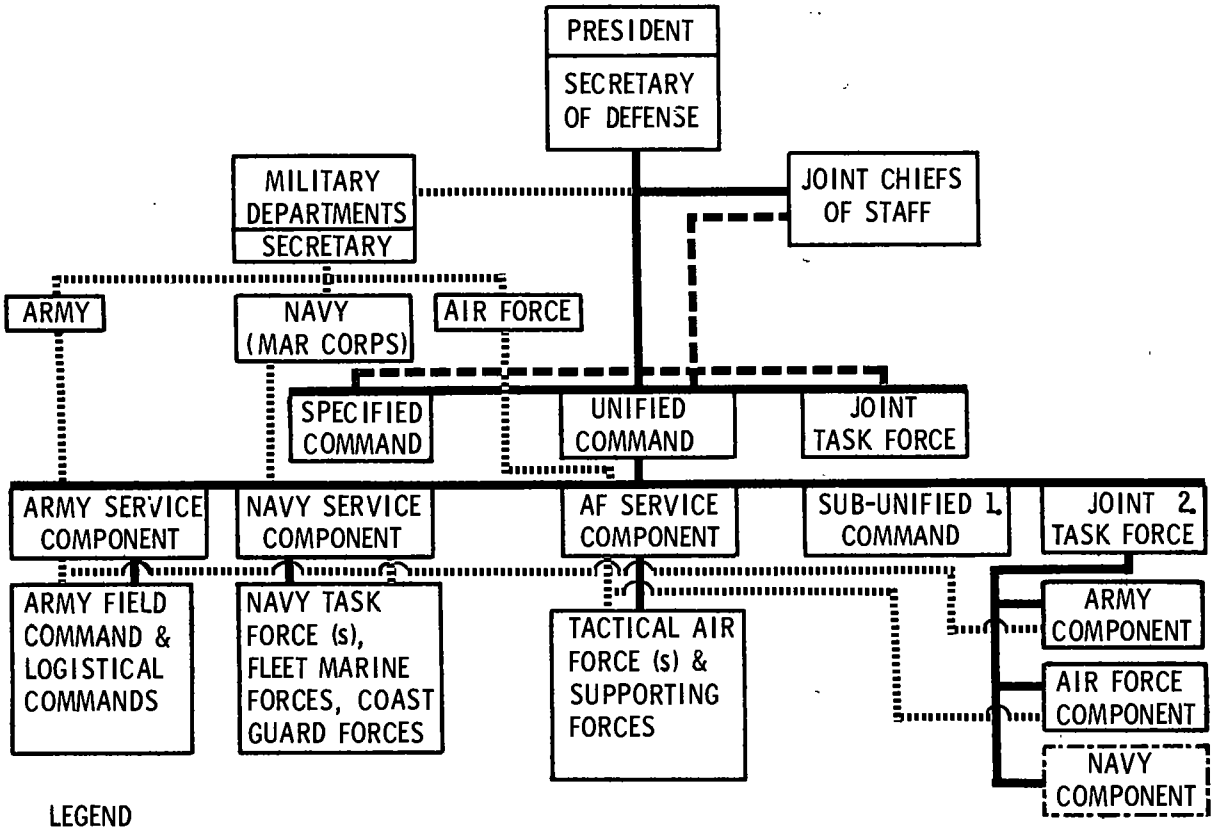

LEGEND

OPERATIONAL COMMAND CHANNEL
STRATEGIC AND OPERATIONAL DIRECTION CHANNEL
LOGISTIC AND ADMINISTRATIVE COMMAND CHANNEL (COMMAND LESS OPERATIONAL COMMAND)

1. WHEN REQUIRED, AND AUTHORIZED BY JCS
2. WHEN REQUIRED FOR SPECIFIC MISSION

FIGURE 1

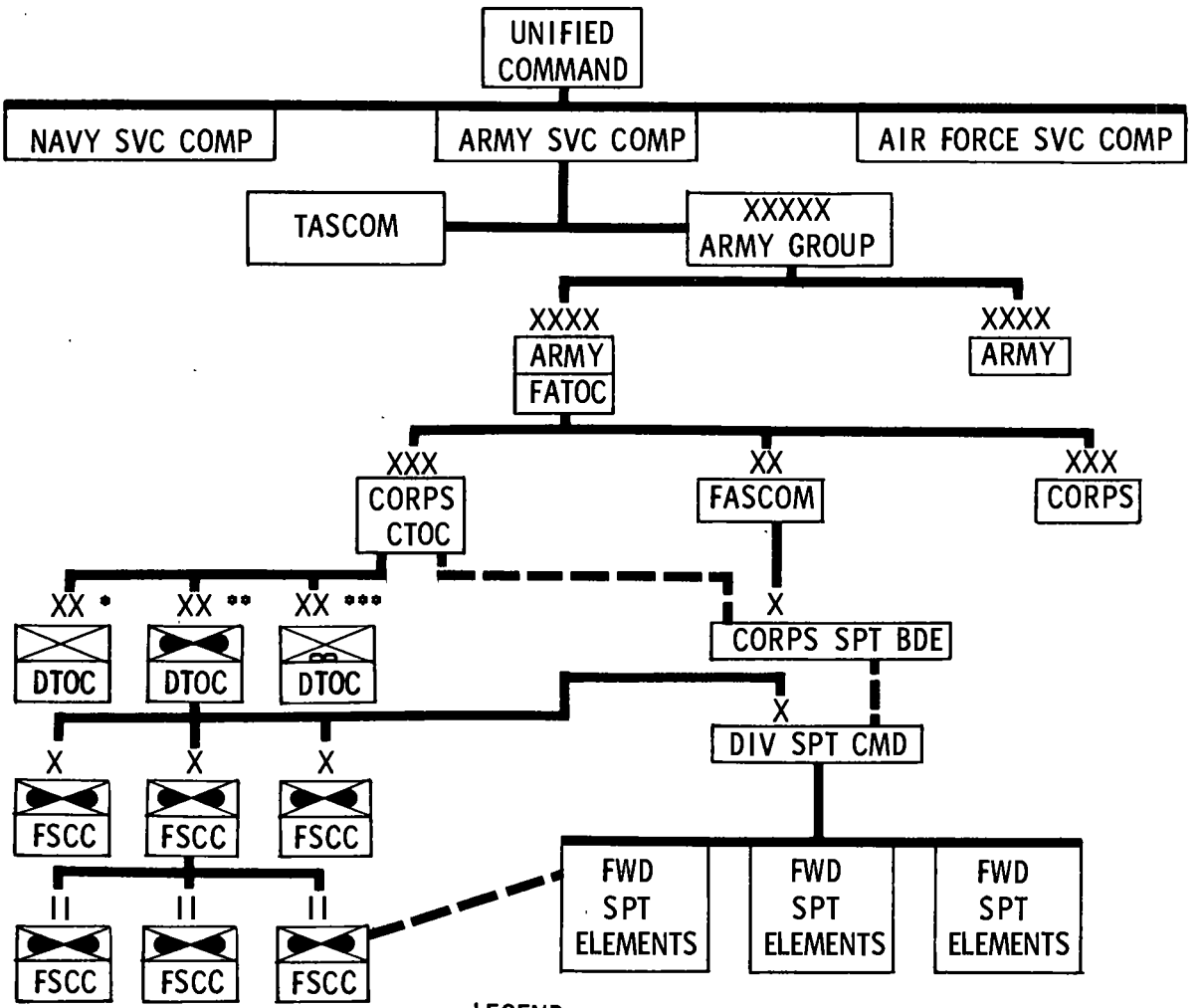

*INF DIV
**AIR MOBILE DIV
***AIRBORNE DIV

LEGEND:

TASCOM - THEATER ARMY SUPPORT COMMAND
FASCOM - FIELD ARMY SUPPORT COMMAND
FATOC - FIELD ARMY TACTICAL OPERATIONS CENTER
CTOC - CORPS TACTICAL OPERATIONS CENTER
DTOC - DIVISION TACTICAL OPERATIONS CENTER
FSCC - FIRE SUPPORT COORDINATION CENTER

COMMAND ———
COORDINATION — — —

FIGURE 2 A TYPE ARMY SERVICE COMPONENT ORGANIZATION

cises command of the forces assigned to his component command in accomplishing the mission assigned. The Service component commanders are closely involved in the coordinated planning and employment of all available resources.

g. The Secretary of Defense or a commander of a unified command may organize joint task forces to perform specific missions. A joint task force is composed of assigned or attached elements of two or more Service components. A joint task force commander exercises operational control through the commanders of the Service components comprising his force. He may exercise command of his own Service component.

302. Army Component:

a. *General:*

(1) Army forces assigned to a theater of operations include appropriate control headquarters and necessary elements of the several arms and services. The latter consist of combat, combat support, combat service support and air defense units. These forces are combined in accordance with the requirements of the mission, and the nature of the operation. A type army component command organization is shown in figure 2.

(2) The number and type of forces provided subordinate commanders within the theater of operation is dependent on the mission assigned and the nature of the operation. These forces may be assigned, attached or placed in support of the command concerned. Forces for which there is a continuing demand are usually assigned, while those required for specific tasks or for a limited period of time are normally pooled at higher echelons and attached as required.

(3) Forces whose capabilities exceed the requirements of a single command, or whose attachment to a subordinate command would unduly burden the commander thereof, are held under centralized control and placed in support of one or more subordinate commands.

b. *Army Group, Field Army and Corps:*

(1) The army group, the field army, and the corps are the larger Army operational commands. None of these has a fixed composition; each is tailored for the accomplishment of specific missions and each can serve as the nucleus of a joint or combined force.

(2) An army group is normally organized to direct the operations of two or more field armies. Its responsibilities are primarily tactical and include planning and allocation of means.

(3) The field army directs tactical operations and provides for the administrative support of assigned and attached units. It consists of a headquarters; certain organic troops; a variable number of attached corps; a variable number of divisions normally attached to corps; and other attached combat, combat support, and combat service support units. A field army may be organized with a small number of divisions without utilizing the corps echelon.

(4) The corps is essentially a large task force consisting of a variable number of division and other combat support units. Frequently corps will be reinforced by attachment of combat service support elements. A corps so reinforced approaches the capabilities and characteristics of a small field army and is referred to as an independent corps. When operating as part of a field army, a corps normally will have a few combat service support responsibilities, receiving such support directly from field army units.

c. *Division:*

(1) The division consists of a relatively fixed command, staff combat and support structure to which are assigned combat battalions (airborne infantry, airmobile, infantry, mechanized infantry, tank) in types and numbers appropriate to the division's mission and its anticipated operational environment. Determination of the types and numbers of combat battalions in a particular division is called "tailoring."

(2) A division is designated by the Department of the Army as airborne, air-

mobile, armored, infantry, or infantry (mechanized), depending upon the types and numbers of combat battalions assigned when it is strategically tailored. This tailoring gives the division and its subordinate units the capability to perform specific missions in an anticipated operational environment.

(3) Within the division, the three brigade headquarters are the major tactical command headquarters to which combat, combat support, and combat service support elements may be attached or placed in support to perform specific missions.

d. *Operations Centers.* Command and staff elements of an Army component command are echeloned into a series of headquarters installations. The staff agency for coordination of tactical operations is the tactical operations center (TOC). The tactical operations center is an integrated staff facility within which are grouped representatives of general and special staff sections concerned with current combat, combat support, and combat service support operations. The overall function of the TOC is to assist the commander by providing current information on tactical operations and on the tactical support available, making recommendations for command decisions, taking action within established policies, and issuing implementing instructions. The G-3 of the Army headquarters normally has staff responsibility for supervision of the TOC. At brigade level and below, the operations center function is primarily an S-2/S-3 complex.

e. *Logistical Commands*:

(1) *Theater Army Support Command.* The theater army support command (TASCOM) is a major subordinate command of theater army. Headquarters TASCOM provides combat service support, through subordinate operating commands, to army forces in a theater of operations and to other forces as designated by the theater army commander. Services provided by subordinate operating commands include general support to one or more field armies consisting of eight to twelve divisions each, direct and general support to the communications Zone (COMZ), and rear area security and damage control within a communications zone.

(2) *Field Army Support Command.* The field army support command (FASCOM) is a major subordinate command of the field army. Headquarters, FASCOM plans, directs, and supervises the provision of combat service support (less construction), through functional control centers and subordinate operating commands, to Army forces within a field army. Services provided by subordinate operating commands include back-up direct support and general support for an eight to twelve division force, direct and general support for nondivisional units in a field army, and rear area security and area damage control for the field army service area.

(3) *Corps Support Brigade.* The corps support brigade (CBS) is a major subordinate command of the FASCOM which, through functional control centers and attached functionalized operating units, provides combat service support for divisional and nondivisional units normally located in a corps area. Attachment of operating units to the CSB may be tailored to support a four-division corps, an independent corps of four divisions or of lesser size, or an independent division.

(4) *Division Support Command.* The division support command (DCS) is a major subordinate command of the division. The DSC, through functionalized direct support units, provides direct support to elements of the division. Direct support units of the DSC are capable of providing forward service support elements (FSSE) which operate in the vicinity of divisional combat elements to provide as much on-site, one-stop service as possible and to expedite provision of service beyond the capability of the FSSE. Elements of the DSC may be tailored to support independent operations of less than division size.

303. Air Force Component:

a. Air Force forces assigned to a theater of operations perform combat and support

functions in furtherance of the mission assigned to the joint force commander. Air Force forces assigned or attached to a joint force are placed under the control of the Air Force component commander (AFCC). The mission assigned to the Air Force component commander is to conduct prompt and sustained air operations in combat which include tactical air operations and its functions normally associated with tactical air support. Tactical air support includes the task of tactical airlift operations, close air support and tactical air reconnaissance as required.

b. The size and type of the Air Force component command in a joint force will be governed by the joint force objectives, assigned mission, the enemy threat and the geographical area of operations. The Air Force component command, when conducting operations in support of field armies or army groups, may consist of one or more tactical air forces (normally a numbered air force) and such supporting forces as required. A tactical air force may operate in the same general area as that of a field army. This tactical air force will be assigned the necessary tactical air resources to conduct sustained air operations to include tactical fighter, tactical bomber, tactical air reconnaissance, tactical airlift, and special air warfare, as well as necessary tactical air control system elements and other capability as required. See figure 3.

c. *Air Force Component Command Post (AFCCP)*. The AFCCP is the field headquarters facility, comprising the normal command sections and the various staff elements. Its location is governed by a number of factors; however, its close proximity to the Army component command post will facilitate close coordination of respective actions.

(1) The Air Force component commander will exercise command of his forces through the Air Force component command post (AFCCP). However, planning, controlling, coordinating and supervising activities that pertain directly to performing tactical air operations (including tactical air support) will be accomplished through the appropriate elements of the Tactical Air Control System (TACS). The senior element in the TACS is the Tactical Air Control Center (TACC).

(2) A key staff member in the AFCCP is the Deputy for Operations, who is charged with staff responsibility for planning, policy making, and coordinating and supervising activities pertaining directly to performance of the command mission. Directly under the Deputy for Operations is the Director of Combat Operations, who is also the Director of the Tactical Air Control Center. Normally, directorates for communications and electronics will be required within the Office of the Deputy for Operations unless these staff elements are assigned as separate Deputies. The former is required because of the essentiality of communications and electronics to the control of operations.

(3) Tactical Unit Command Post. Tactical units will have a tactical unit command post which is comprised of the normal command and staff facilities, i.e., intelligence, communications, armament, administration, operations, etc. Combat support units will have a command post which will also be comprised of the normal command and staff facilities. The tactical unit CPs are identified with the level of command with which they are associated, i.e., 1st Air Division TUCP, 4th Wing TUCP, 30th Squadron TUCP, etc.

(4) Tactical air forces require a highly developed and systematized control system to fully exploit the inherent flexibility of tactical air power. The Tactical Air Control System is such a system. The Tactical Air Control System provides the Air Force component commander with the organization and equipment necessary to plan, direct and control tactical air operations and to coordinate joint operations with other Service components. (See figure 4.) The system posseses the flexibility required for adaptation to either large or small scale operations in varying intensities of warfare. It is organized, equipped and manned to control air

A TYPE AIR FORCE COMPONENT ORGANIZATION

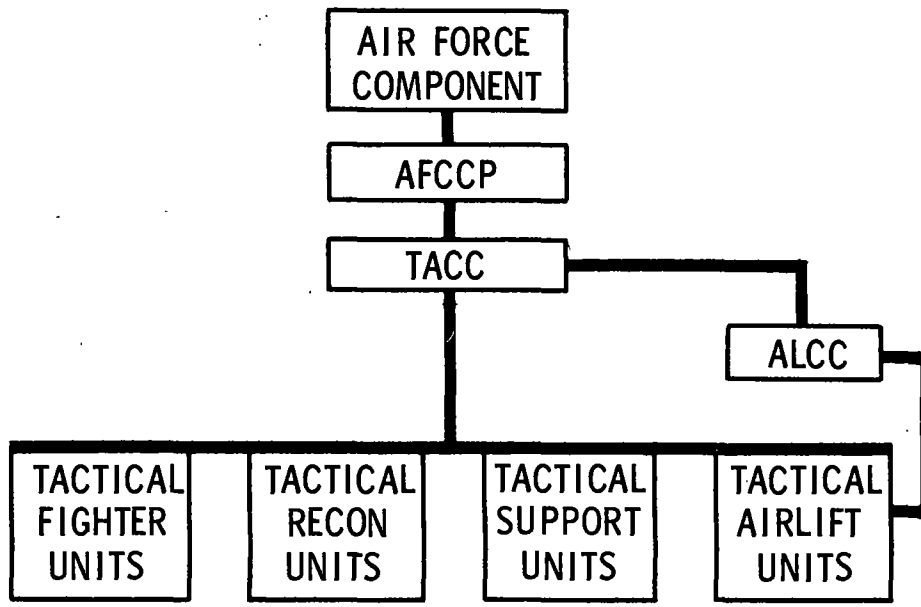

FIGURE 3

A TYPICAL TACTICAL AIR CONTROL SYSTEM

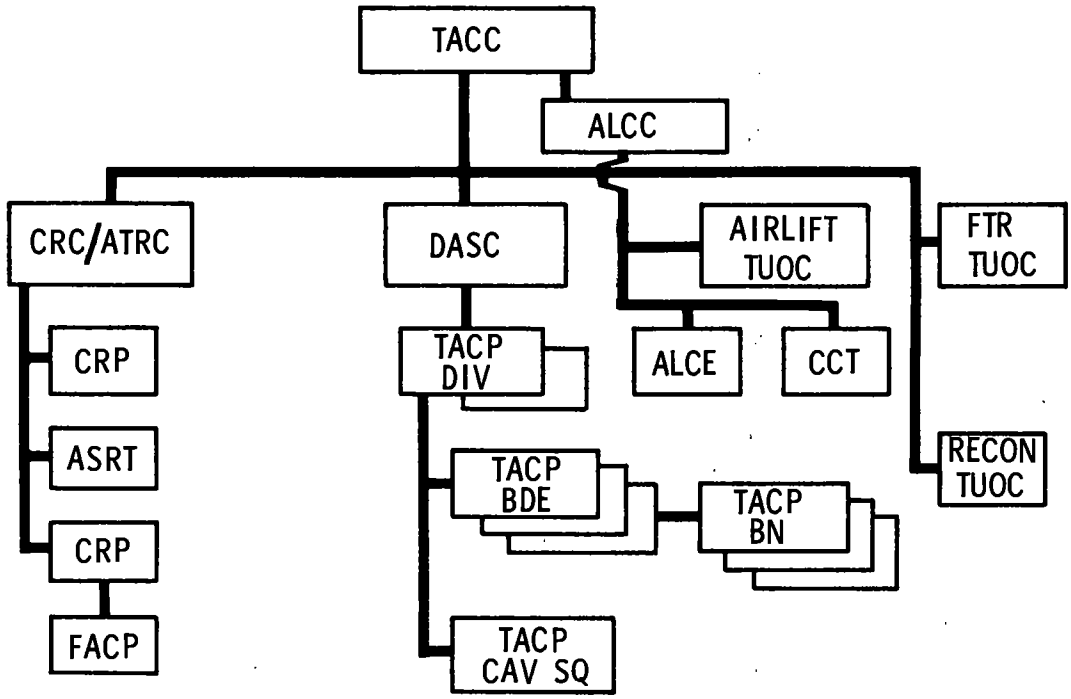

TACC - TACTICAL AIR CONTROL CENTER
ALCC - AIRLIFT CONTROL CENTER
CRC - CONTROL AND REPORTING CENTER
ATRC - AIR TRAFFIC REGULATION CENTER
CRP - CONTROL AND REPORTING POST
ASRT - AIR SUPPORT RADAR TEAM
FACP - FORWARD AIR CONTROL POST
DASC - DIRECT AIR SUPPORT CENTER
TACP - TACTICAL AIR CONTROL PARTY
DIV - DIVISION
BDE - BRIGADE
BN - BATTALION
CAV SQ- CAVALRY SQUADRON
TUOC - TACTICAL UNIT OPERATIONS CENTER
ALCE - AIRLIFT CONTROL ELEMENT
CCT - COMBAT CONTROL TEAM
FTR - FIGHTER
RECON - RECONNAISSANCE

FIGURE 4

forces in tactical air operations conducted independently or in conjunction with land and naval forces.

d. The TACS organization has a designed flexibility that permits it to be tailored to any given situation. A TACS may be organized to include all or combinations of the various elements which have been authorized to form the system. The TACS' function is to provide control of air operations in Air Force component commander's area of responsibility. Each TACS element comprises personnel, communications and electronic equipment, and materiel appropriate to its function and level. At the Air Force component command level, the TACC is the operations center of the AFCCP. The TACC is the air operations facility wherein the Air Force component commander plans, controls, and coordinates the employment of tactical air forces within an assigned area of operations. The TACC will normally be located in close proximity to the Air Force component command post, however, operational requirements may dictate the need for an advanced or alternate TACC which may be located as a separate facility.

303 e. The TACC is the center for all air control functions in the area of operations. The fundamental principle of TACC operations is the concept of centralized control of the total tactical air effort by the TACC, with decentralized responsibility for execution of necessary air functions. Coordination of tactical air support with the Army is normally accomplished through the DASC or ALCC, as appropriate. Communication is provided with higher and lateral headquarters, subordinate units, and agencies within the Tactical Air Control System, as well as with the appropriate Army headquarters and agencies. Appropriate liaison elements from the land forces are located at the TACC to facilitate direction of air-ground operations. Navy/Marine representatives may also be located at the TACC.

f. The TACC prepares the daily air operations combat plan and directs the employment of weapons in execution of the plan in response to the current tactical situation. The Air Force component commander or his designated representatives within the TACC plans, coordinates, monitors and directs the employment of the total tactical air effort directly or through supervising the activities of the DASCs CRC, ALCC, and TUOCs.

g. Tactical airlift forces, like other elements of the tactical air forces, are assigned to the Air Force component commanders of unified commands. The size of the force provided a given unified commander is influenced by many considerations, including the urgency of the situation, magnitude of the requirement, and size of the area. Regardless of the size of the tactical airlift force the internal organization structure of the force remains essentially the same.

h. Direction and control of tactical airlift forces are vested in the overall Air Force component commander who establishes subordinate tactical airlift organizations, assigns units and tasks, and delegates the required control authority. The degree and level to which this control authority is delegated is dependent upon the scope of the operation and the tactical situation.

i. Normally the Air Force component commander will assign Air Force tactical airlift resources to his designated airlift force commander, who will exercise control of these resources through an Airlift Control Center (ALCC).

j. *Airlift Control Center.* The ALCC is an element of the TACS and is subordinate to the TACC. The Director of the TACC normally decentralizes the execution responsibility for the conduct of continuous tactical airlift operations to the ALCC. The ALCC is the TACS element primarily concerned with the detailed execution of tactical airlift operations. This centralization of airlift information is essential for effective coordination of plans and operations, and for maximum economy in the employment of resources. All essential information is presented so as to permit rapid translation into terms of total

airlift requirements versus capabilities under varying situations and conditions. Since the tactical airlift force supports all Services involved in a joint operation, Service representatives (Liaison Officers) are positioned in the ALCC to accomplish the necessary liaison and coordination for their own Service components. The ALCC can be a section within the TACC or operated as a separately located element. Although an element of the TACS, when required, the ALCC may be located within the command post complex of the airlift force commander. In each case, the ALCC, an integral part of the TACS, is subordinate to and operationally connected with the TACC to permit integration of tactical airlift operations with the overall air effort. This arrangement minimizes interference with other friendly forces and insures the proper response to the directives and policy of the Air Force component commander.

k. Each tactical wing or separate unit maintains a command post. It is the tactical unit commander's headquarters facility, including the command section and the various staff agencies. Within each tactical unit command post is a TUOC facility which is the operational nerve center of the headquarters. Through it, the unit commander controls his resources, directs the operations, and receives his orders and combat plans from the Air Force component commander. The TUOC is provided with communications to the TACC, CRC, and DASCs, and in the case of airlift units, to the ALCC.

Chapter 4

COMMAND AND CONTROL

401. General:

a. The successful conduct of joint operations requires coordination of effort and effective direction of participating forces. The principles of command and organization for joint forces are contained in JCS Pub 2, Unified Action Armed Forces (UNAAF).

b. Clear lines of control and positive delineation of command responsibility must be established within the theater, with operational commands being organized to accomplish specific major tasks with minimum duplication of effort and overlapping of functions. Combat service support should be organized to provide maximum cross-servicing between National forces consistent with operational efficiency.

c. USAF tactical airlift forces are assigned to or placed under the operational control of the Air Force component commander of unified/joint force commands. The joint force commander in turn approves tactical tailoring which will best support the mission. In determining the most effective method to coordinate the forces of two or more Services for the accomplishment of the assigned mission in a single operation or a campaign, consideration shall be given to: the mission to be accomplished; the capabilities and functions of the Services involved; the geographic location and type of contemplated operations; and the nature, strength and capabilities of friendly and enemy forces. These factors will determine the nature and size of the forces to be furnished by each Service, and the method and degree of coordination and command required. In cases of operational need, short-haul tactical airlift aircraft performing supply, resupply, or troop-lift functions in the field army area may be attached to the subordinate tactical echelons of the field army (corps, division, or subordinate commander), as determined by the appropriate joint commander. (Authority for attachment is established by Subsection 6, Section 2 of JCS Pub 2, UNAAF.)

d. Attachment constitutes an approved arrangement for the exercise of command which is intended to increase flexibility in the control of forces of more than one Service and to assure optimum responsiveness to certain operational needs which may occur. The "attachment" authority has not been exercised as a general practice; however, the Army and the Air Force visualize that situations will occur in which exercise of this authority may promise operational advantage. The approved description of the attachment arrangement does not specify that operational control is a feature of attachment; at the same time, attachment to include operational control is not excluded. Thus, attachment may encompass operational control if, in the judgment of the commander prescribing the attachment, operational considerations so require.

e. In addition to scheduled or preplanned intratheater airlift operations, USAF tactical airlift capabilities are allocated or attached for supply, resupply or troop-lift support of the army in the field. In determining whether tactical airlift capability should be allocated or attached for fulfillment of Army requirements, the following factors are among those that should be considered:

(1) Mission of the Army echelon requiring USAF tactical airlift.

(2) Type of Army operation(s): Independent/semi-independent operations; extended area operations; restricted terrain operations.

(3) Plan of maneuver of the Army echelon concerned: rapidity of movement; density of Army forces in operational area; type of maneuver (airborne, airmobile or land operation); time phasing of maneuver plans.

(4) Amount and type of tactical airlift available.

(5) Capabilities and limitations of the tactical airlift forces.

(6) Availability of suitable airlift bases, terminals and/or staging areas.

(7) Availability of other transport means.

(8) Availability and mobility of prestocked, on-hand supplies, equipment and materiel within or immediately available to the Army echelon concerned.

(9) Expected expenditure of supplies, particularly Class I, III, IIIA, and V.

(10) Intelligence of enemy forces with emphasis on air offensive/defensive capabilities and fluidity of tactical/logistical situation.

(11) Weather and terrain in the Army echelon's area of operations.

(12) Criticality of airlift operations to mission success of the Army echelon concerned.

(13) Proximity of airlift departure points, staging areas, flight routes or arrival/terminal areas to enemy forces.

(14) Degree of tactical airlift reponsiveness essential for successful execution of airlift requests in terms of quality, quantity and timeliness.

(15) Nature and size of the force and/or materiel to be airlifted, to include cubic space/weight cargo characteristics and troop compartment requirements.

(16) Existing command and control relationships of the supporting-to-supported forces.

(17) Flight distances involved in tactical airlift support of the Army echelon's operations.

(18) Duration of the requirement.

402. Allocation:

a. *General.* Tactical airlift capability allocated to the Army component commander will be specified in any of the following ways:

(1) Sorties by type aircraft.

(2) Gross tonnage.

(3) A combination of the above.

b. *Command.* The Air Force component commander will exercise control of forces assigned through a Tactical Air Control Center (TACC). An airlift force commander may be designated to command all Air Force airlift resources. Detailed planning and coordination of airlift activities are accomplished by the ALCC which is located in the command post for the airlift force commander.

c. *Priorities and Allocations.* Short-haul tactical airlft may be designated to provide support for specified Army units. In such cases, airlift capability will be allocated to the DASC in sufficient quantity to meet requirements of the tactical situation. The DASC is collocated with the Army tactical operations center (TOC) of a corps or independent division. It therefore is stationed in the geographical area in which forward based short-haul tactical airlift is being used to provide support. Additionally, DASC personnel are immediately responsive to changing tactical situations within their geographical area of responsibility. The ratio of airlift capability allocated to each DASC will be determined through coordination between the Air Force component commander and the Army component commander. Airlift not allocated to a DASC (or attached to Army units) will be centrally controlled by the Air Force component commander through the airlift commander and his associated Airlift Control Center (ALCC).

403. Attachment:

a. *General.* When the joint force commander determines that an operational need exists which can best be fulfilled by attachment of USAF tactical airlift units or aircraft, an order directing attachment will be published. The attachment of such USAF

forces to the Army in the field will be subject to the limitations and conditions set forth in the order of attachment. The commander to which such units are attached shall have that degree of authority over, and responsibility for, the attached unit as is indicated in the order directing attachment, and the authority to require compliance with the general regulations applicable to his entire command. The order directing attachment shall include:

(1) The purpose of the attachment.

(2) When possible, the approximate duration.

(3) The degree of authority over, and responsibility for, the attached unit given to the commander to which the unit is attached.

b. *Attachment Request Procedures.* When the operational need warrants attaching USAF tactical airlift forces to Army echelons in the field, the Army commander requiring such attached support will forward a request through Army command channels to the Army component commander in the joint force organization. The Army component commander will evaluate the request and, if approved, will forward the request to the joint force commander (information to the Air Force component commander) who will make the final decision on the attachment request. The results of the final decision will be made known through Army and Air Force channels to the appropriate Army and Air Force headquarters constituting the supporting and supported force.

c. *Coordination Between Supported and Supporting Commanders.* Upon receipt of attachment orders, the supporting force commander will coordinate closely with the supported force commander in developing the detailed plans required to implement the attachment orders. Such plans will include, but not be limited to the following:

(1) Communication nets to be established.

(2) Exchange of liaison parties as required.

(3) Positioning of and movement plans for supporting forces.

(4) Exchange of information and intelligence concerning the tactical or logistical plans of the supported forces and capabilities and limitations of the supporting force.

(5) Arrangements for provision by the supported force of common items of supply to the supporting force as indicated in the order of attachment, or as jointly agreed to by the Army and Air Force component commanders.

(6) Command and staff relationships between the supported force and supporting force as indicated in the order of attachment.

(7) Exchange of operations, logistical and administrative standing operating procedures (SOPs) between the supported and supporting forces as appropriate.

(8) Establishment of detailed procedures as appropriate, required to execute preplanned and immediate tactical airlift missions in supporting of the Army force to which the USAF tactical airlift forces are attached.

d. *Control of Attached Airlift Forces.* When control of the attached unit is retained by the Air Force, this control will be exercised by the Air Force component commander or as specified in the order of attachment. When operational control of the attached unit is passed to the Army, control will be exercised through Army command, operational or logistical channels.

404. Army Logistics System:

a. *General Concepts:*

(1) The availability of automatic data processing equipment (ADP) permits, for the first time, the centralization of combat service support management functions. Large quantities of detailed requests, requisitions, records, information and processing actions are necessarily dispersed among many management agencies when manual operations are utilized. With ADP this detail is performed by machine under centralized management. Thus, better support is provided to the tactical commander by reducing the number of agencies with which he must deal.

(2) The key to the supply system of TASTA-70 is scheduled and throughput supply distribution. Scheduled supply is a system enabling suppliers to calculate quantitative requirements of essential items for using organizations and periodically ship these supplies without requisition. Scheduling applies best to items that are consumed or required at a fairly uniform rate. Those items whose resupply is conditioned by user demands will normally not be included in the scheduled or throughput system. This system is made feasible through the use of automatic data processing and is practicable in that it permits the user to express his supply requirements either as changes to scheduled quantities or as requisitions for unscheduled items. Throughput supply is simply the shipment of supplies from rear depots as far forward into the combat zone as possible; rehandling and trans-shipment at intermediate points is avoided whenever possible. Throughput supply distribution, for the most part, will be utilized within the theater, originating from depots located in the vicinity of port sand beaches and extending as far forward as the division support command. Essential ingredients for efficient throughput are a centralized inventory control system and a responsive and reliable system of movements and communications.

b. *Army Logistic Channels:*

(1) Supply requirements originate with the user and the corresponding requirement for supply movement originates with the Army agency maintaining records of supply status, stock control, or inventory control.

(2) At the division support command (DSC), a direct support unit (either the supply and transport battalion or maintenance battalion for repair parts) maintains the stock account records. If USAF tactical airlift is required to move the item to the requester, the direct support unit places the requirement upon the division movements section. If the item is not available, a requirement is made on the stock control center of the corps support brigade.

(3) At the Army corps support brigade (CSB), a stock control center (SCC), through the use of automatic data processing equipment (ADP), maintains supply policy instructions and a record of all stocks in both direct and general support supply units within the corps CSB. Thus, the SCC is able to comply with real time supply management instructions or locate an item if it is on hand in a corps support brigade supply support unit. It is the SCC, when filling a supply request from Army divisional or nondivisional units, that places a requirement upon the corps support brigade movement control center (MCC) to move the item. If supply policy so directs or the item is not located within the corps support brigade, the request is transmitted to the field army support command (FASCOM).

(4) At the FASCOM level, the inventory control center (ICC), through the use of ADP, maintains an inventory of all field army assets, and functions for the field army in the same manner as does the SCC for the corps support brigade. The ICC places a movement requirement on the MCC by sending the MCC a copy of the MRO directed to the applicable supply support unit. The item may be furnished by a direct or general support unit in the FASCOM or in another support brigade within the field army. If the supply requirement cannot be filled from assets within the field army, it is transmitted to the theater army support command (TASCOM).

(5) The TASCOM ICC of the supply and maintenance command, directs shipment from a depot and, as at lower levels, furnishes the movements control agency (MCA) with a copy of the shipping directive which serves to place a requirement upon the MCA for transportation.

c. *Transportation Movements:*

(1) Transportation movements is the management of the Army command's movement capability to insure maximum fulfillment of movement requirements. The transportation movements functions at field army level are carried out by the movements con-

trol center (MCC) located in the field army support command (FASCOM), and at corps level by the MCC in the corps support brigade. (An independent corps contains a corps support command whose organization and functions in support of the corps force are the same as those of the FASCOM in support of the field army.) The MCC, functioning under the staff supervision and direction of the Assistant Chief of Staff, Movements, and within policies, procedures, and priorities established by the Army commander, manages all movement resources of the Army command. At division level, the staff transportation officer (transportation movements office) of the DSC performs the transportation movements functions for the division and its subordinate elements.

(2) Essentially, the transportation movements function involves three elements: requirements, capability, and management.

(a) *Movement Requirements.* A movement requirement is a requirement to transport personnel or materiel. The tactical operation center (TOC) informs the MCC of the commitment of USAF tactical airlift resources for Army combat support missions so that the MCC can maintain current information on committed resources. Requirements for movement of replacement personnel are placed upon the MCC by the ACofS, Personnel and Administration (PAC); and requirements for movement of supplies and equipment are placed upon the MCC by the inventory control center (ICC) at theater support command (TASCOM) and FASCOM, and the stock control center (SCC) at support brigade.

(b) *Movement Capability.* Movement capability is a function of operationally ready airlift cargo space and passenger seats available and forecast on a daily basis. The MCC maintains liaison with USAF tactical airlift forces (through the ALCC) in order to keep the MCC informed of the status of USAF tactical airlift resources.

(c) *Management.* Army control of attached USAF tactical airlift forces (when operational control is passed to the Army) is concerned with planning, coordinating, programming, and supervising the commitment and use of such forces. These functions are accomplished by the MCC within prescribed policies, and priorities of the land commander concerned.

d. *Transportation Movements Services.* The transportation movement office (TMO) is the Army field agency of the transportation movement services. Operating under the supervision of the appropriate MCC, TMOs are located to cover all critical transportation points throughout the theater Army component command. Positioning of TMOs for coordination of USAF tactical airlift resources includes, as a minimum, a detachment in each Army division area, and Air Force ALCC, a detachment at each USAF and Army air terminal that handles Army movements, and a detachment per two or three Army direct and general support units. Additional TMOs may be provided where required. (It should be noted here that TMOs are also provided in the theater army support command (TASCOM) at Army direct and general support units, depots, and aerial and water ports.) Functions of the TMO include:

(1) Keeping the MCC currently informed as to existing and forecast USAF and Army airlift capabilities.

(2) Receiving Army movement requirements from the MCC.

(3) When USAF tactical airlift aircraft are attached under operational control of the Army, receiving frag orders from the Army support command commander, and forwarding such orders to the supporting USAF tactical airlift unit.

(4) When USAF tactical airlift capabilities are allocated in support of the Army, receiving requests from the Army support command commander and forwarding such requests to the USAF through the corresponding level of the tactical air control system (TACS).

(5) Regulating movement of cargo from direct, general, and depot support units into the USAF or Army air terminal in accord-

COMMUNICATIONS NET FOR COMBAT SUPPORT REQUEST

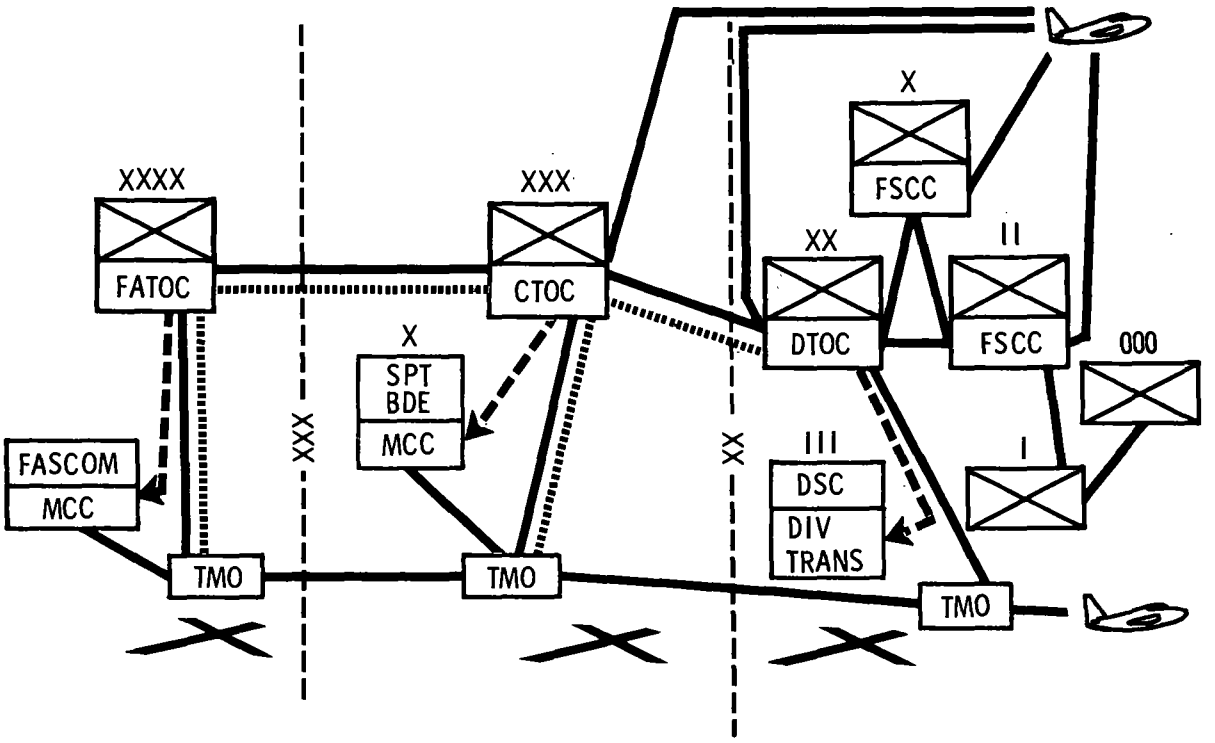

LEGEND

RADIO
LAND LINE
INFORMATION AND ADVICE

NOTE: WHEN REQUIRED, DIRECT COMMUNICATIONS MAY BE PROVIDED FROM THE BATALION FSCC TO FATOC

FIGURE 5.

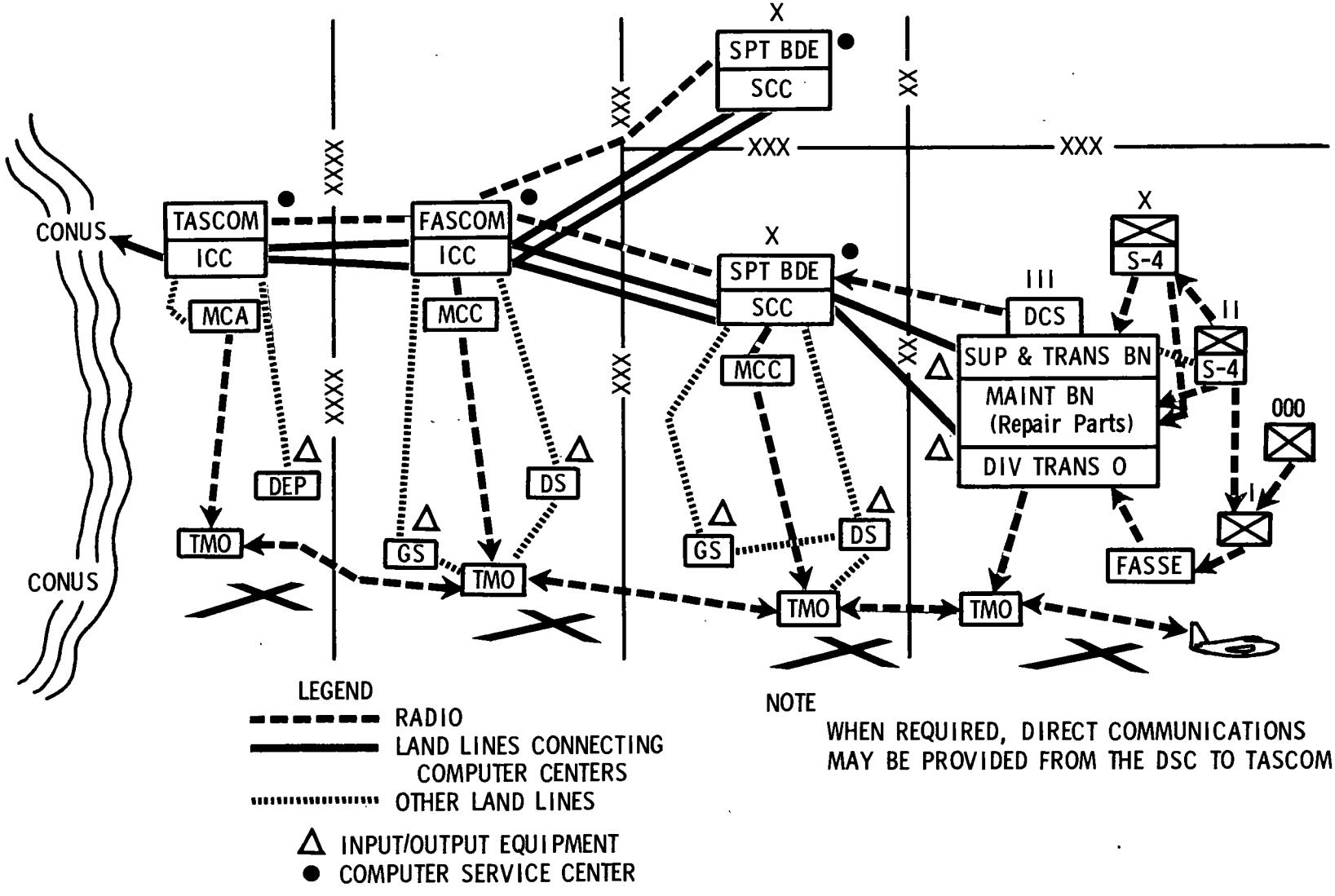

FIGURE 6. COMMUNICATIONS NET FOR COMBAT SERVICE SUPPORT REQUESTS

ALLOCATION METHOD FOR
AIRLIFT OF COMBAT SUPPORT
FORCES

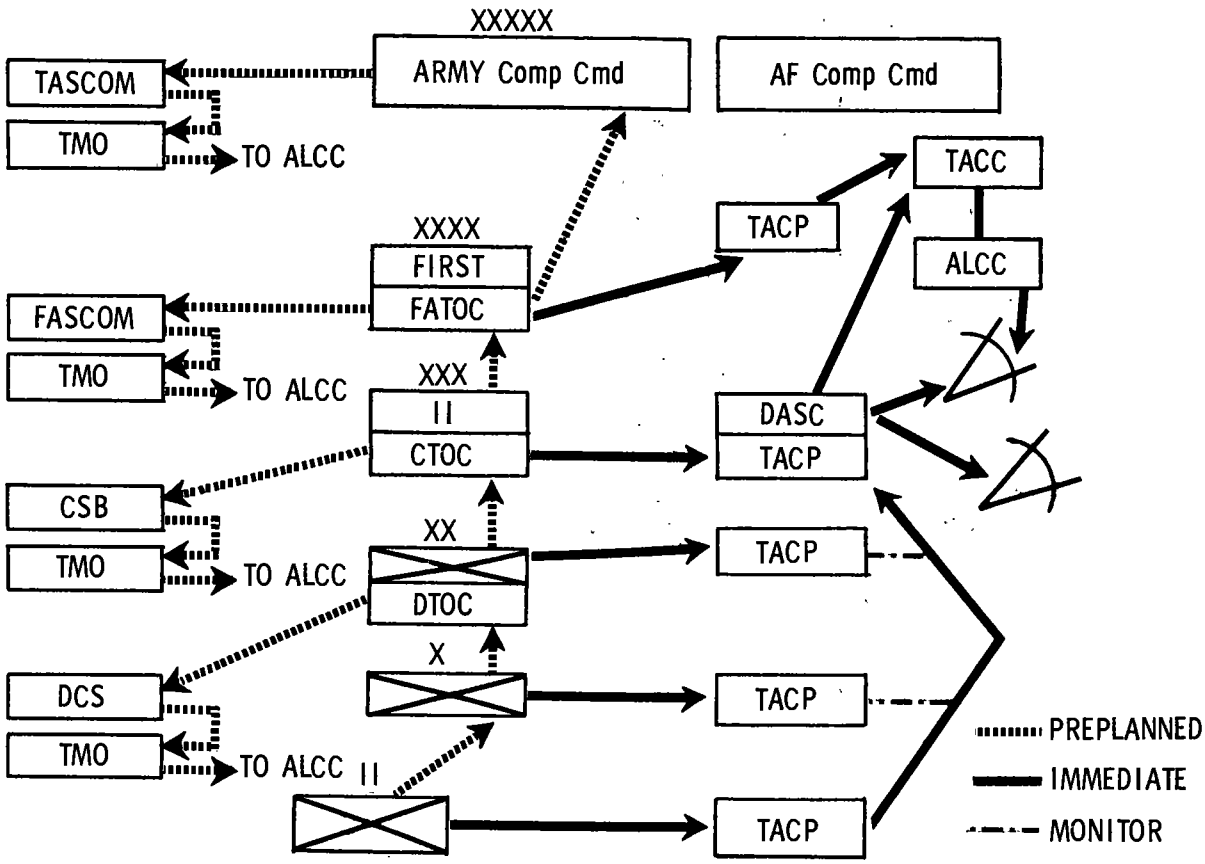

FIGURE 7

ATTACHMENT METHOD FOR AIRLIFT OF COMBAT SUPPORT MISSIONS

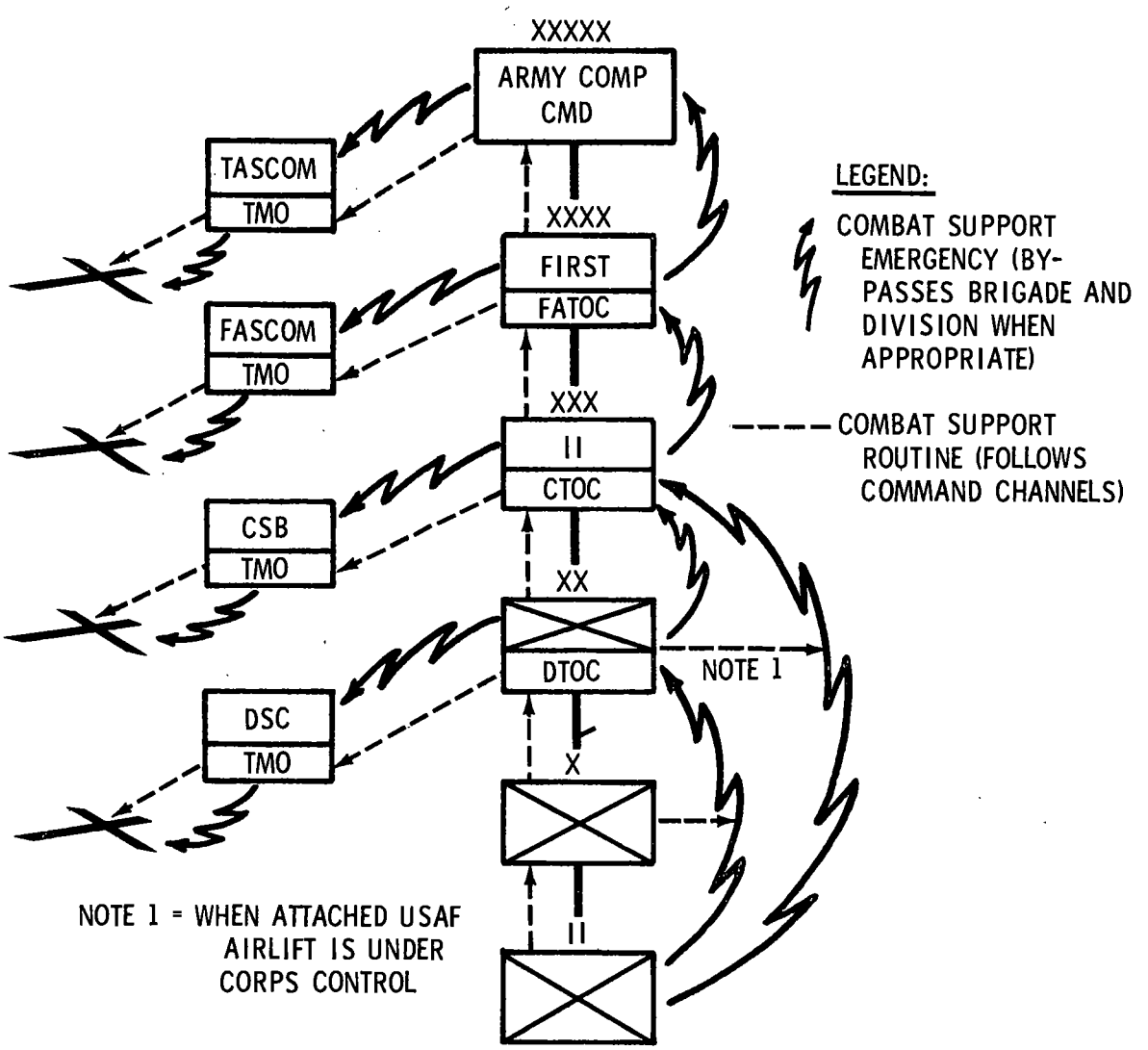

FIGURE 8

ance with priorities, schedules, and directives of the MCC.

(6) Regulating movement of replacement personnel to the USAF or Army air or Army air terminal in accordance with priorities, schedules, and directives of the MCC.

(7) In coordination with the receiving Army agency, scheduling and supervising movement of shipment from the USAF of Army air terminal to consignee.

(8) Assisting the shipping and receiving Army agencies to secure additional transportation when required to move cargo and personnel to or from the USAF or Army terminal.

(9) Informing the TMO at the destination point, with an information copy to intervening MCCs, when the shipment is made. Information forwarded includes the origin of movement, date and time of shipment, specific type of commodity or number of passengers and consignee by aircraft type and tail number, destination of the USAF or Army aircraft, and scheduled time of arrival.

(10) When directed by the MCC or requested by the consignee, diverting USAF or Army aircraft to an alternate destination. (The authority to divert USAF tactical airlift aircraft exists when such aircraft are attached under the operational control of the Army. When aircraft are under the control of the Air Force, diversion may be accomplished through Air Force command channels). In-flight diversion is accomplished through the appropriate Air Traffic Control system. Such action is taken only when directed or requested by appropriate authority. The TMO diverting the shipment advises all USAF and Army agencies, as appropriate, interested in the shipment to include the TMO at departure point, original destination TMO, the consignee, and the USAF tactical airlift commander.

(11) The destination TMO notifies the TMO at origin (with information copy to intervening MCCs) of the arrival of shipment.

e. *Throughput Delivery of Supplies.* Throughput of supplies, by-passing intermediate levels, is one of the most significant means of reducing inventory requirements. Differences in areas of operation, tactical plans and enemy capabilities will influence the quantity of throughput that is desirable or can be built into the supply system and movements control system.

(1) The ICC (SCC) will place transportation requirements on the Movements Control Center since the ICC (SCC) has knowledge not only of total transportation requirements, but also of the shipping and receiving capability of each supply installation in the OCOMZ (FASCOM).

(2) Scheduled supply is emphasized for as many mission essential items and other items for which requirements can reasonably be predicted. Scheduled supply is a system by which the supplier calculates the quantities of items required by the user and ships them without requisitions on a schedule which is coordinated with the user. This schedule can be changed or modified at any time by the user by notifying the supplier.

(3) Use of the throughput concept will be made to the degree feasible. Requests from the field army will normally be satisfied from rear depots in the COMZ with delivery far forward into the combat zone as is feasible, by-passing the forward depots. In the event of a disruption of lines of communications or a major forward displacement of the combat forces, stocks may be shipped from forward depots to supplement or temporarily replace deliveries from rear depots.

(4) The ICC (SCC) determines what supplies are required for movement to forward units or activities. Together, the MCC and the ICC (SCC) establish supply distribution patterns and a movement program so that the resources of both the depots and the transportation system can be best utilized. In determining these distribution patterns, consideration is given, among other items, to the capabilities of the consignor and consignee to ship and receive by the various modes, their total capability, their respective

geographical locations, and their locations with respect to the available transportation system. These "most desirable" patterns are then placed in the computers which serve the ICC (SCC) and MCC.

(5) When a supply requirement is received by the ICC (SCC), determination is made as to supply availability and which depot or activity can best accomplish the supply action. The supply action is thus relayed to the shipping activity and to the MCC by computer-to-computer link.

(6) The MCC determines which mode can best accomplish the movement, whether the consignor can load and the consignee unload the shipment within the time frame of the supply and transportation action and advises the TMOs at origin and destination of the transportation requirement.

(7) The origin TMO coordinates with the consignor and carrier to determine when and where the transport equipment is to be spotted for loading and when the loaded equipment will be released for movement. The TMO determines the estimated time of arrival (ETA) of the shipment at destination and advises the destination TMO accordingly.

(8) The destination TMO coordinates with the consignee and the carrier to assure placement of the inbound loaded equipment at the desired point, prompt unloading and return of the empty equipment into the transportation system for further use.

405. Army Request Procedures:

a. *General.* U.S. Air Force tactical airlift capability may be allocated or units attached to U.S. Army echelons in the field as required to move troops, equipment, or supplies in support of operational and/or logistical missions. The supported Army commander controls the use of airlift resources through communications provided by Army personnel and facilities at each level of command and with each liaison group and other related activities. The Army command, control and communications systems through which combat support and combat service support airlift are requested and directed, provide a rapid and reliable system extending from units through the various echelons of command, to the Army component commander. The Army by means of transportation movement offices (TMOs) forwards requests for USAF tactical airlift support to the appropriate element of the USAF tactical air control system. The TMOs serve also in a liaison function by passing information and intelligence to and from Army and Air Force command, operational and/or logistical headquarters.

b. *Army Communications Channels.* The field army communications system provides two basic channels over which USAF tactical airlift support is normally requested, or, if appropriate, directed. Alternate routes are provided when required. Selection of the method used is dependent upon the nature of the mission, urgency of the requirements, and the methods of control included in the order of attachment.

(1) *Command Net (Fig 5).* The command net is used to obtain USAF tactical airlift for fulfillment of routine combat support requirements.

(2) *Administrative/Logistics Net (Fig. 6).* The administrative/logistics net is used to obtain USAF tactical airlift for fulfillment of both routine and emergency combat service support requirements.

(3) *Alternate Methods.* Alternate means of data flow include telephone, teletype, courier, and message center.

c. *Request Procedures for Allocated USAF Airlift:*

(1) *Combat Support:*

(a) *Emergency.* Army requests for emergency airlift for combat support missions can originate at any level and be passed to the command level designated by the Army as having approval authority for forwarding requests to the DASC (see figure 7). Requests will be passed through the comunications facilities of the Air Force TACPs. The TACP at the Army level of command having approval authority for passing emergency

airlift requests to the DASC will transmit the requirement over the immediate air request net to the DASC. TACPs at intermediate levels will monitor and acknowledge receipt of each request. The TACP airlift officer will determine if the type airlift allocated to the DASC can efficiently be used to accomplish the misison and coordinate with his respective G(S)-3, G(S)-4 representative as required. Normally, silence for a specified period of time by intermediate TACPs will indicate approval by their supported Army elements. If a disapproval is not received, the DASC will launch alert aircraft to accomplish the mission. Emergency requests which exceed the allocated resources of the DASC will be passed to the TACC which will direct the ALCC to accomplish the mission. This will be accomplished as specified by the Airlift Force Commander.

(b) *Routine.* When USAF tactical airlift is allocated in support of the Army, requests for airlift support will follow the channels as described below (paragraph 405d); however, the requirement for such airlift support is in the form of a request rather than a directing order (see figure 7).

(2) *Combat Service Support.* Emergency and routine requests for allocated USAF tactical airlift for combat service support missions are as prescribed below (paragraph 405d) for combat support missions.

d. *Request Procedures When USAF Tactical Airlift Forces are Attached to the Army:*

(1) *Combat Support:*

(a) *Emergency.* A request for emergency combat support airlift may originate at any level in the Army in the field. When USAF tactical airlift aircraft are attached under operational control of the Army, the Army command exercising operational control of such attached forces issues a directing order to USAF tactical airlift forces to execute the mission. Any intervening Army FSCC or TOC may disapprove the request. Approval is indicated by silence on the part of intervening Army commands for a specified period of time. The Army command level controlling the USAF attached airlift advises the requesting Army unit of approval. (See figure 8.)

(b) *Routine.* Requests for routine USAF tactical airlift for combat support forces will follow Army operational channels (see figure 8) when airlift forces are under operational control of the Army.

(2) *Combat Service Support.* A request for routine or emergency combat service support airlift may originate at any Army echelon. The request is normally transmitted over the Army administration/logistics net to the Army combat service support unit having support responsibility. Requirements that cannot be met at that level are processed by electrical means through Army Combat Service Support channels to the first Army echelon having the capability to fulfill the request. Any Army component headquarters disapproving a request for tactical airlift support will notify the requesting Army unit immediately through Army channels. The Army order to the attached USAF tactical airlift forces under operational control of the Army follows the procedures shown in figure 9.

(3) Request procedures for USAF tactical aircraft attached to the Army with control remaining with the USAF command are as described in paragraph 405c above.

ATTACHED METHOD FOR AIRLIFT OF COMBAT SERVICE SUPPORT MISSIONS

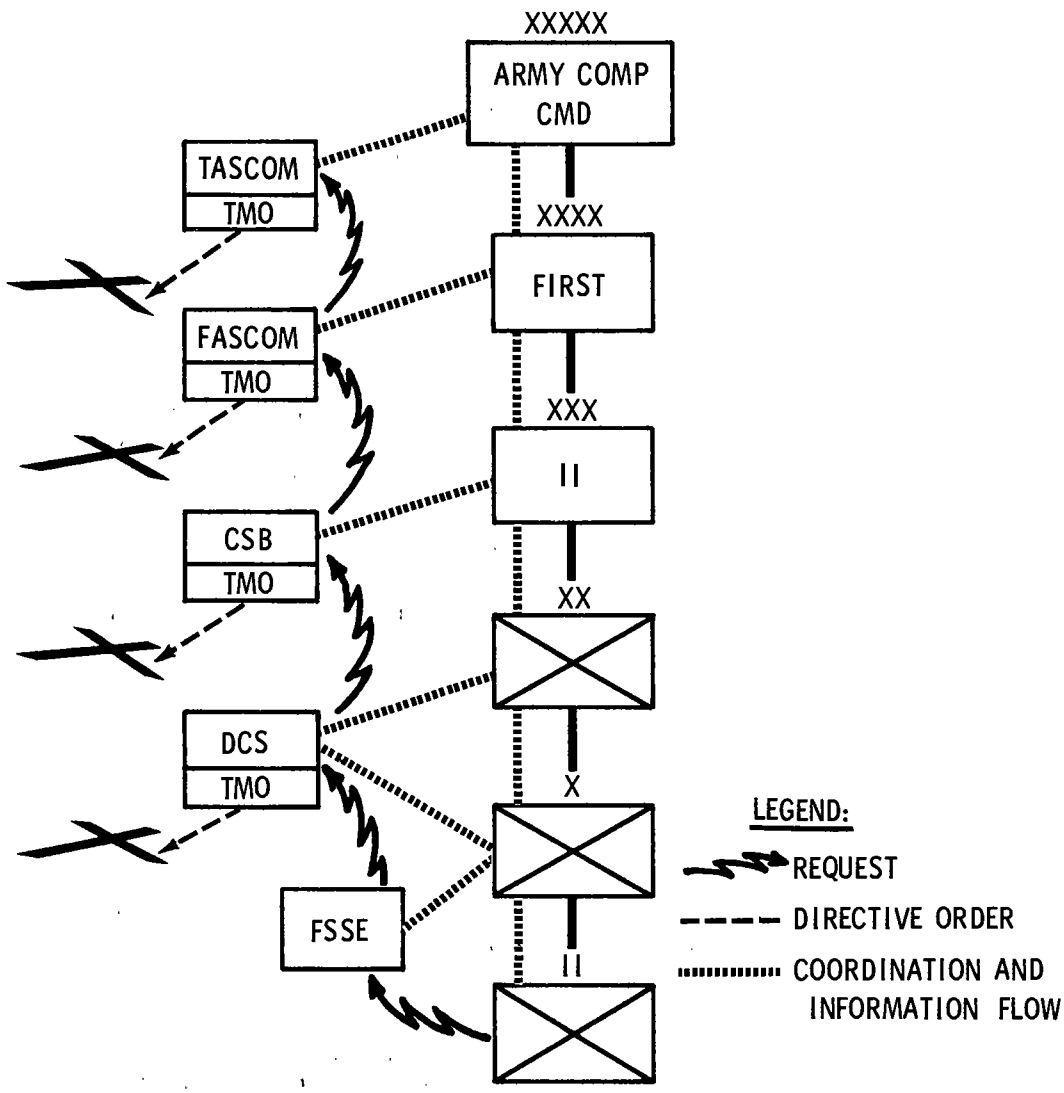

FIGURE 9

BY ORDER OF THE SECRETARIES OF THE AIR FORCE AND THE ARMY

OFFICIAL

J. P. McCONNELL
General, U.S. Air Force
Chief of Staff

R. J. PUGH
Colonel, USAF
Director of Administrative Services

KENNETH G. WICKHAM
Major General, United States Army
Adjutant General

HAROLD K. JOHNSON
General, United States Army
Chief of Staff

DISTRIBUTION:

Air Force: S; X:

Air University, Maxwell AFB, Ala 36112	5,000
Chief of Naval Operations (OPNAV-OP), Wash DC 20350	150
US Strike Command, MacDill AFB, Fla 33608	150
USAF Air Ground School, Eglin AFB, Aux #9 Fla 32544	250

Active Army & USAR: To be distributed in accordance with DA Form 12-11 requirements for Army Forces Joint Airborne Operations.

National Guard: None.